SERVICE : 2600 LITRE INDUSTRIAL TANK

QUANTITY : 1 OFF

ITEM LIST

ITEM	QTY	SIZE	DESCRIPTION
MAN HOLE	1	ø455	MAN WAY ENTERY

MATERIAL

ROOF	MDPE
SHELL	MDPE

OTHER

TYPE SUPPORT	NIL
MANHOLE COVER / DAVIT	NOT INCLUDED
CLIPS FOR LADDERS/PLATFORMS	NOT INCLUDED
CLIPS FOR PIPE SUPPORTS/GUIDES	NOT INCLUDED
LIFTING LUGS	NOT INCLUDED
INSULATION	NIL

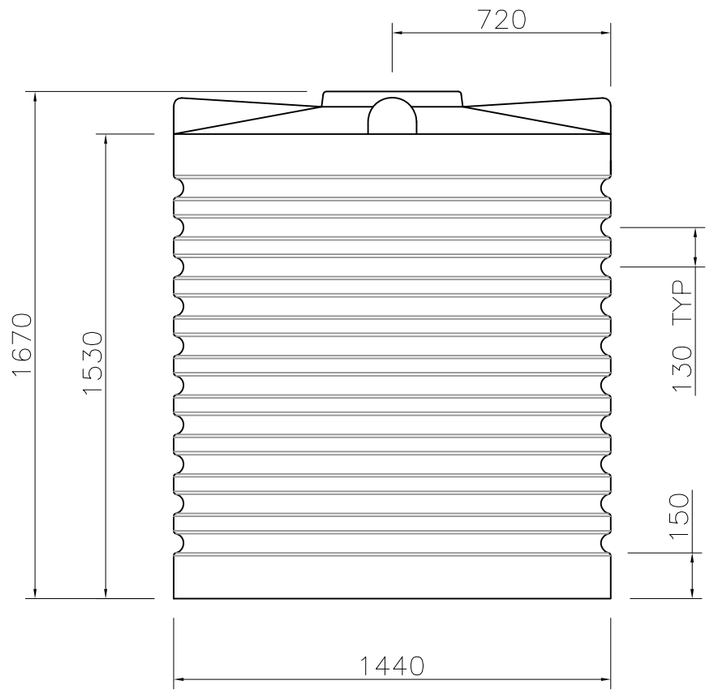

FRONT VIEW 1:50

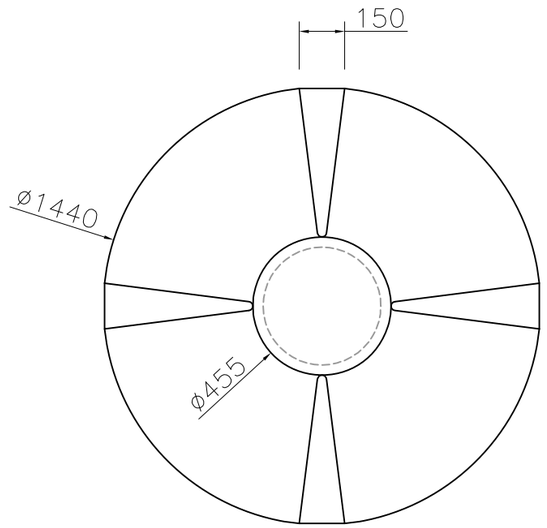

TOP VIEW 1:50

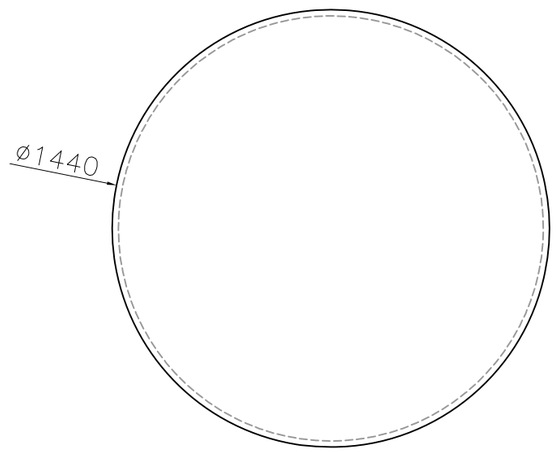

BOTTOM VIEW 1:50

PERSPECTIVE

CLARK TANKS INDUSTRIAL

REVISIONS

No.	DATE	REVISION	BY	CHKD.	PROJ. ENG.	ENGR. MGR.	CLIENT
A	11 OCT 2007	ISSUED FOR APPROVAL	K.S.	R.G.	M.J.	D.McG.	

COPYRIGHT

NOTE THAT UPON ACCEPTANCE OF THIS DRAWING, IT IS EXPRESSLY AGREED THAT THIS DRAWING IS THE PROPERTY OF CLARK TANKS. THIS DRAWING AND ALL INFORMATION HEREIN CONTAINED REMAIN THE PROPERTY OF CLARK TANKS AND SHALL NOT, WITHOUT PRIOR WRITTEN CONSENT, BE COPIED EITHER DIRECTLY OR INDIRECTLY, IN WHOLE OR IN PART OR BE USED TO ASSIST IN PRODUCTION OF OR TO FURNISH ANY INFORMATION FOR THE MAKING OF ANY DRAWINGS PHOTOCOPIES, PRINTS OR OTHER REPRODUCTIONS THEREOF.

JOB NUMBER	ISSUE DATE	SCALE
CTI 001	11 OCT 2007	1 :50

TITLE : 2600 LITRE INDUSTRIAL TANK GENERAL ARRANGEMENT & DETAILS

A1 | DWG. No. CT-07-2600 | REV. A